ELECTRICAL WORKS IN THREAD CUTTING ROOM

RAW POWER DISTRIBUTION

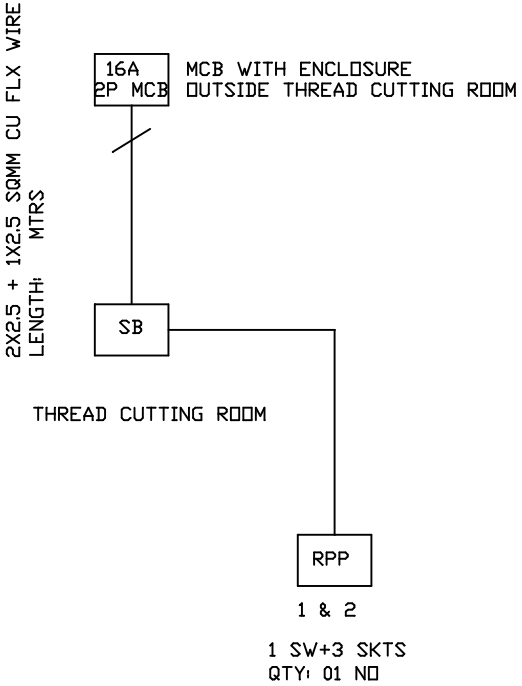

ELECTRICAL WORKS IN JIG MILL ROOM
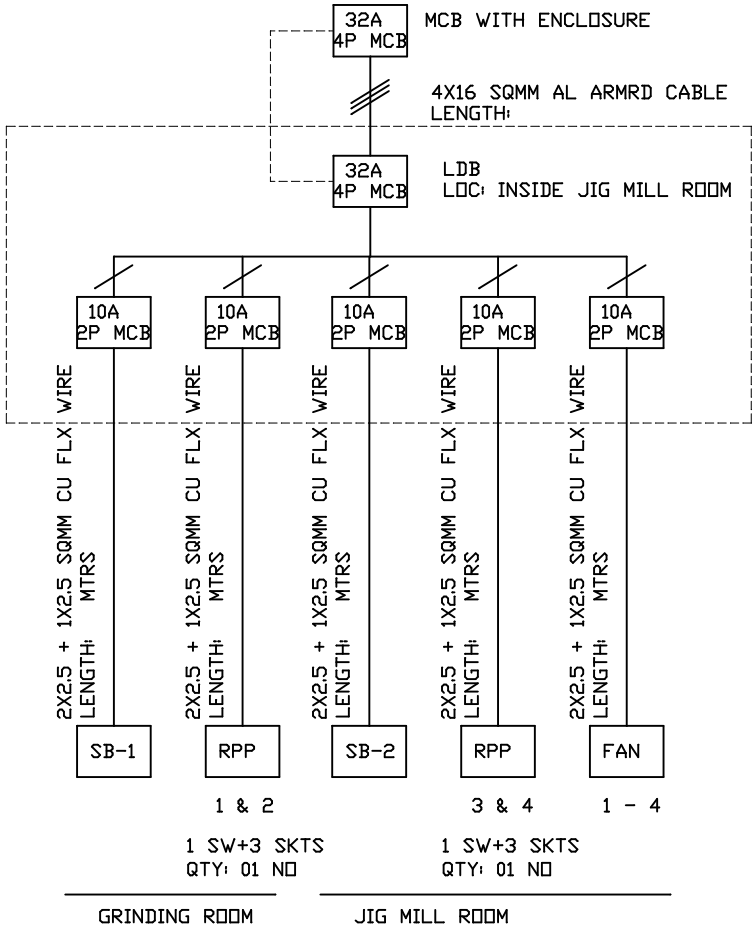
RAW POWER DISTRIBUTION